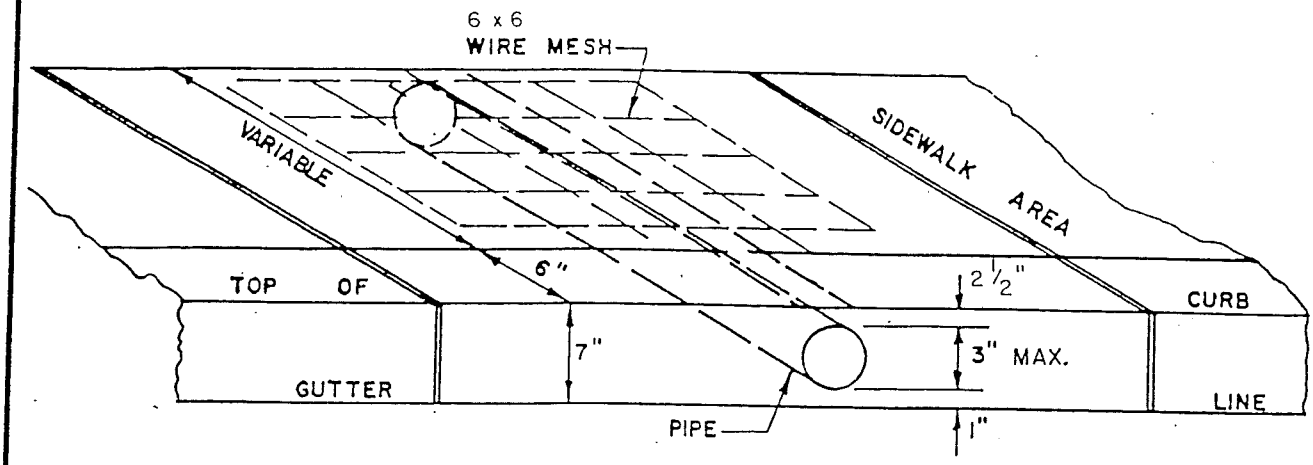

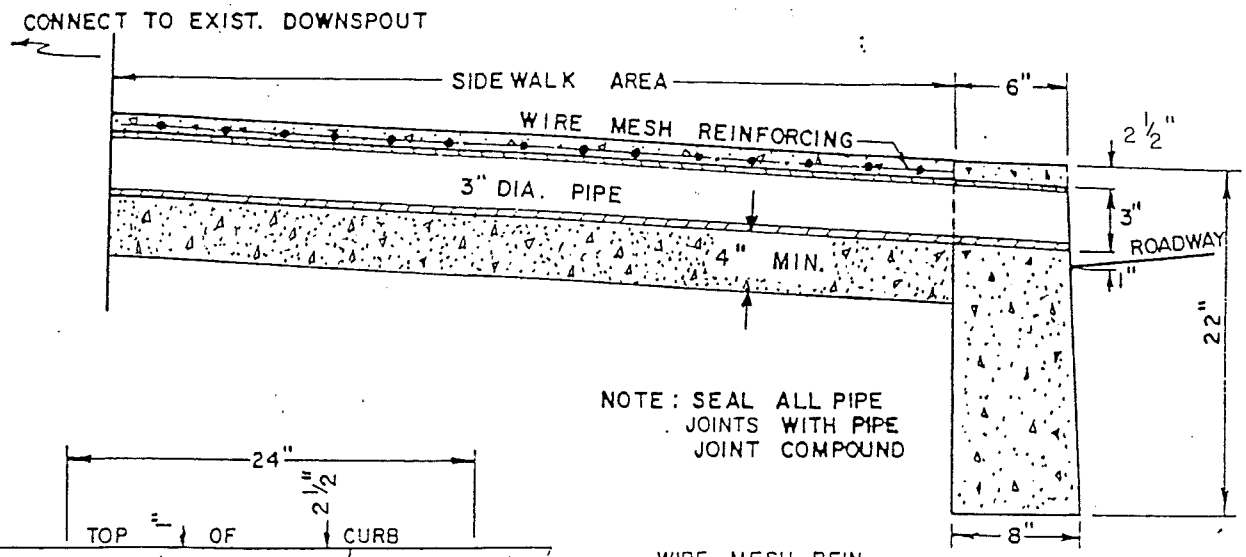

NOTE: SEAL ALL PIPE JOINTS WITH PIPE JOINT COMPOUND

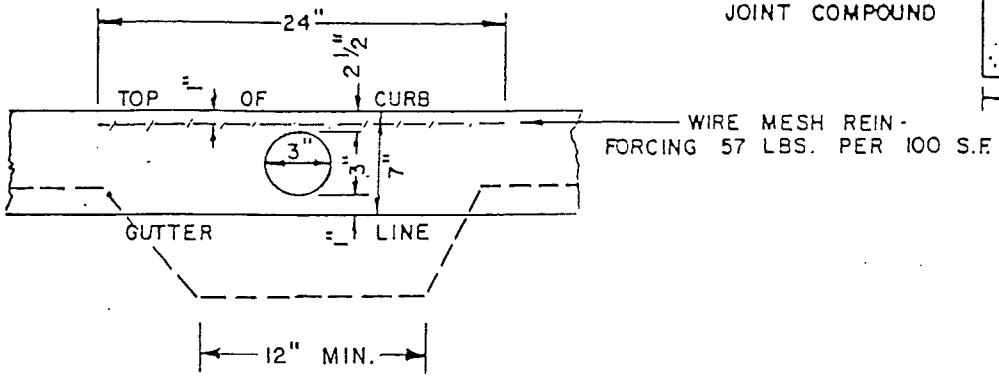

BOROUGH OF MACUNGIE

LEHIGH COUNTY, PENNSYLVANIA

3" PIPE DRAIN IN SIDEWALK DETAILS